USE AND COMBINATIONS OF KPL UNITS

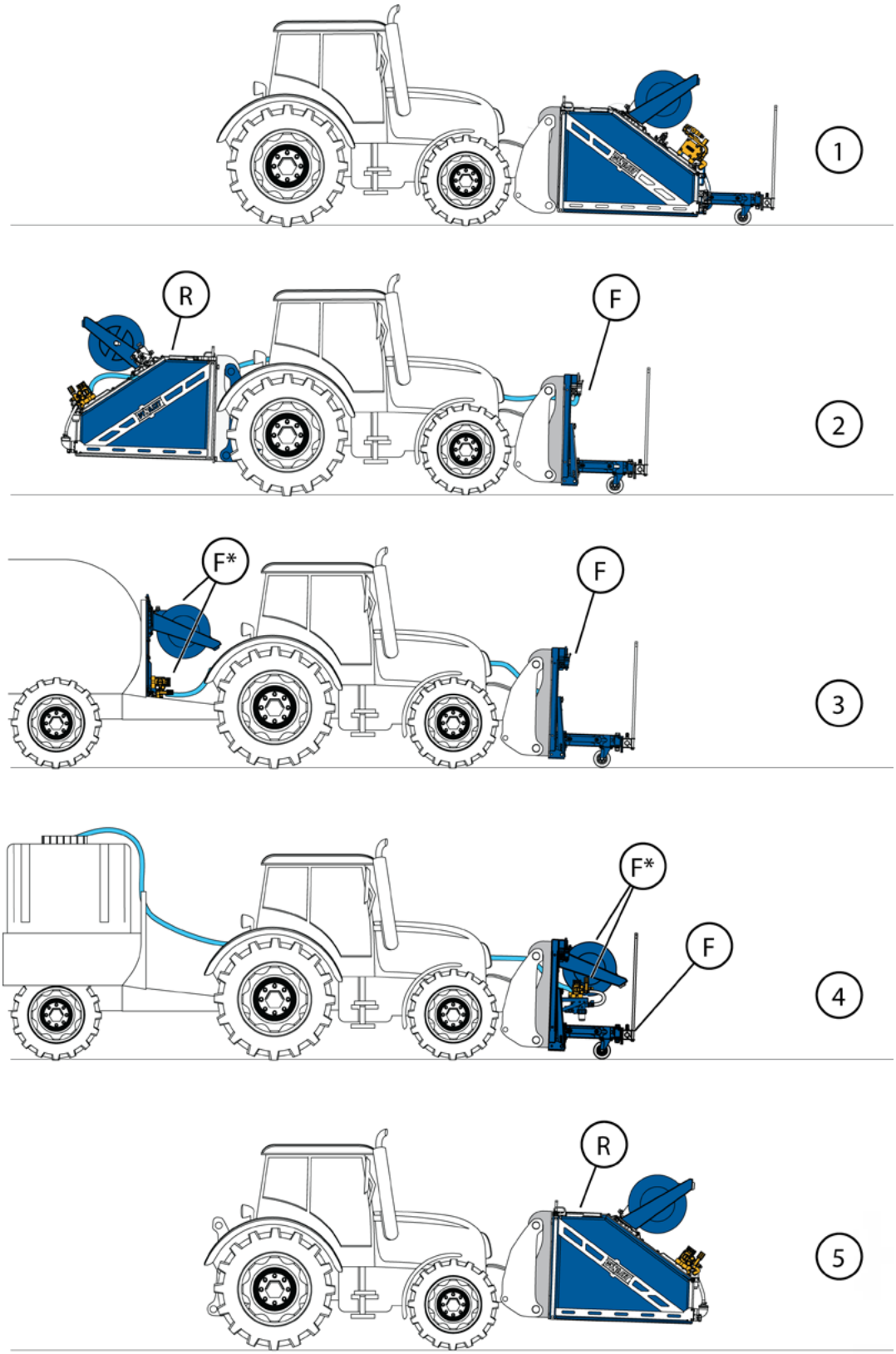

Picture 2: KPL Combinations